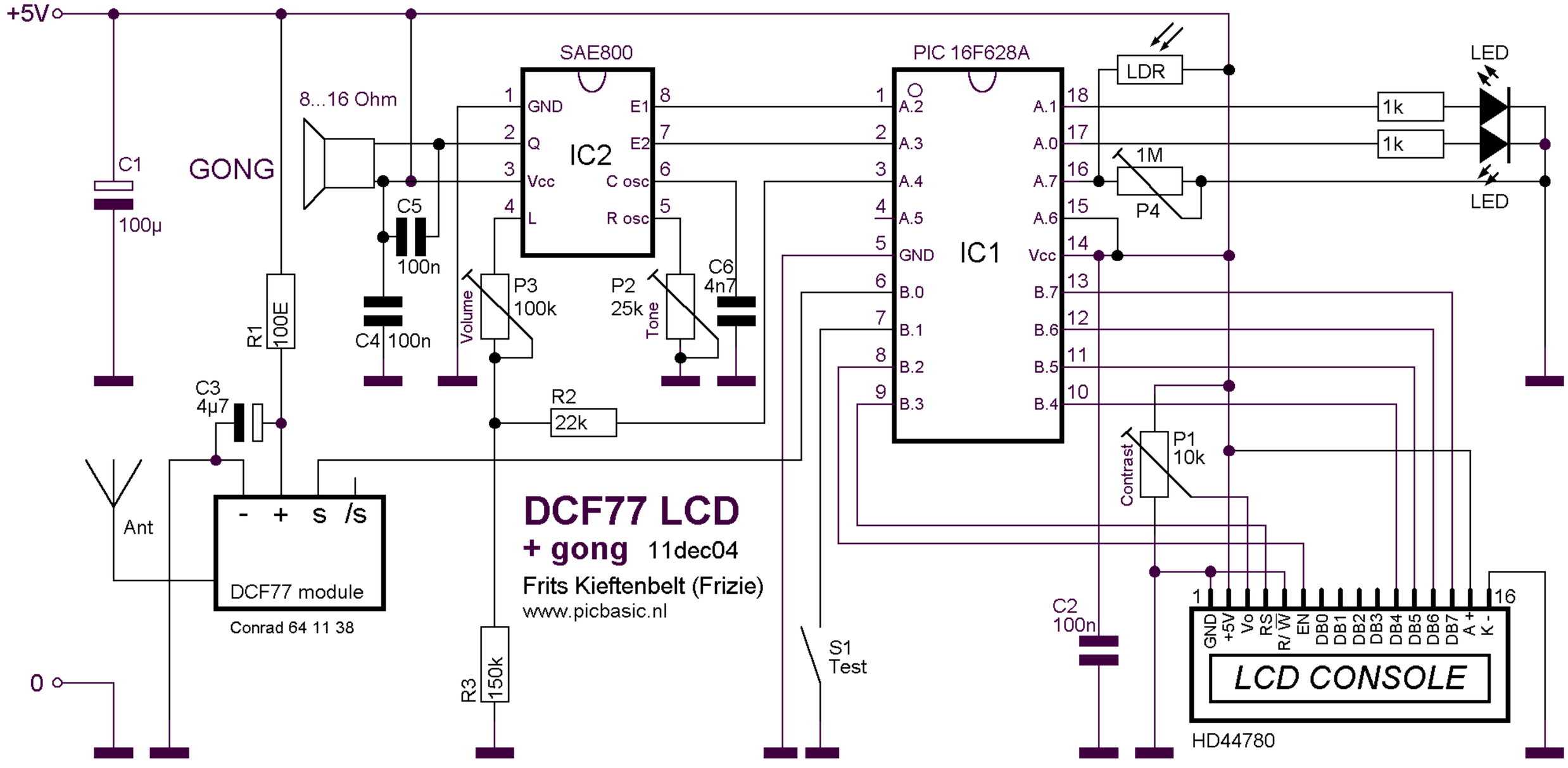
+5V
0
C1
100µ
GONG
8...16 Ohm
C5
100n
C4 100n
R1
100E
C3
4µ7
Ant
- + s /s
DCF77 module
Conrad 64 11 38
SAE800
IC2
GND
Q
Vcc
L
E1
E2
C osc
R osc
P3
100k
Volume
P2
25k
Tone
C6
4n7
R2
22k
R3
150k
PIC 16F628A
IC1
A.2
A.3
A.4
A.5
GND
B.0
B.1
B.2
B.3
A.1
A.0
A.7
A.6
Vcc
B.7
B.6
B.5
B.4
LDR
1M
P4
LED
1k
1k
LED
P1
10k
Contrast
C2
100n
S1
Test
DCF77 LCD
+ gong 11dec04
Frits Kieftenbelt (Frizie)
www.picbasic.nl
GND
+5V
Vo
RS
R/W
EN
DB0
DB1
DB2
DB3
DB4
DB5
DB6
DB7
A +
K -
LCD CONSOLE
HD44780